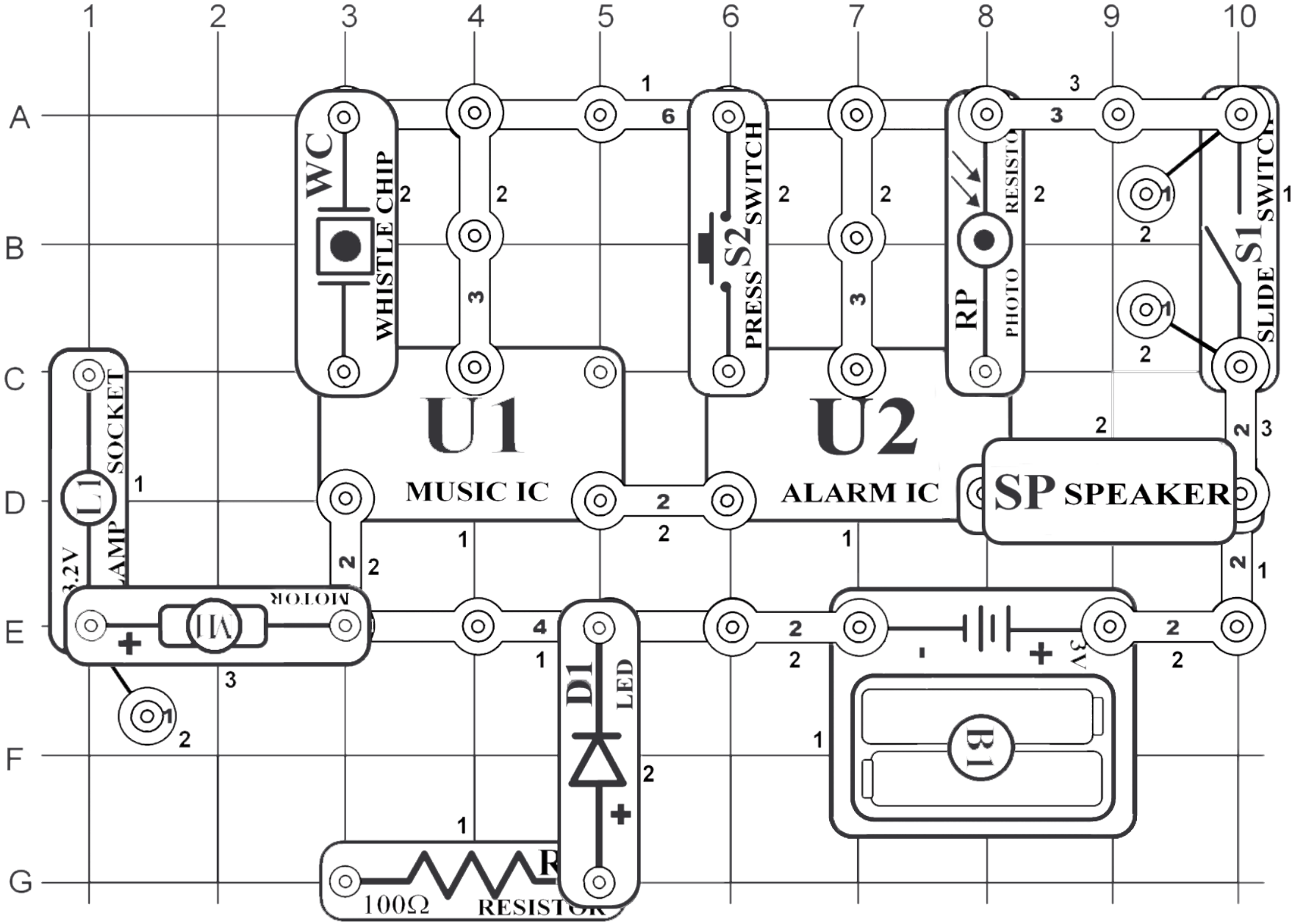

©2018, Elenco Electronics, Inc. All rights reserved.